L - WIRING DIAGRAMS - TURBO

1995 Volvo 850

1995 ENGINE PERFORMANCE
Volvo - Wiring Diagrams

850 - Turbo

WIRING DIAGRAMS

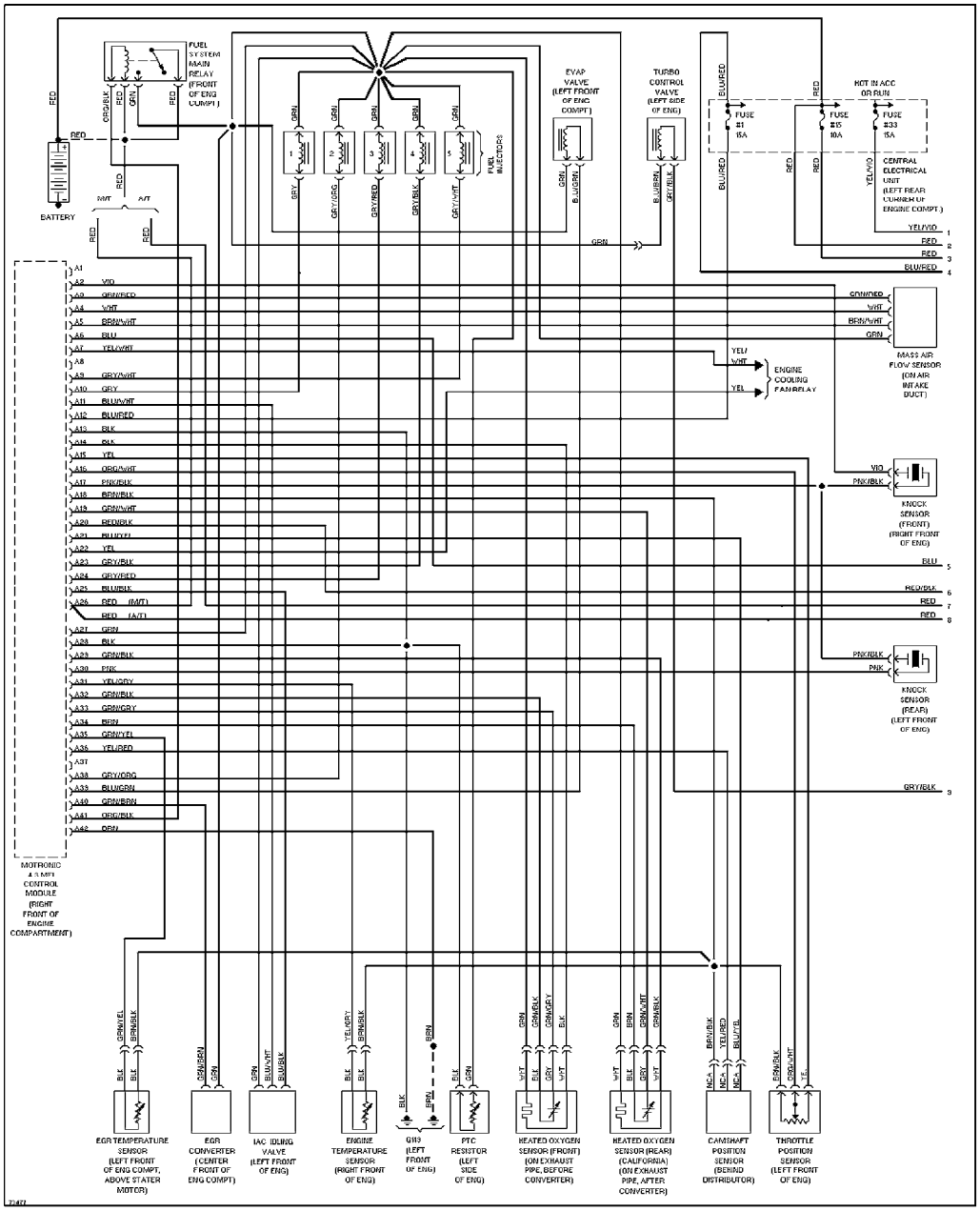

Fig. 1: Wiring Diagram (1 Of 2)

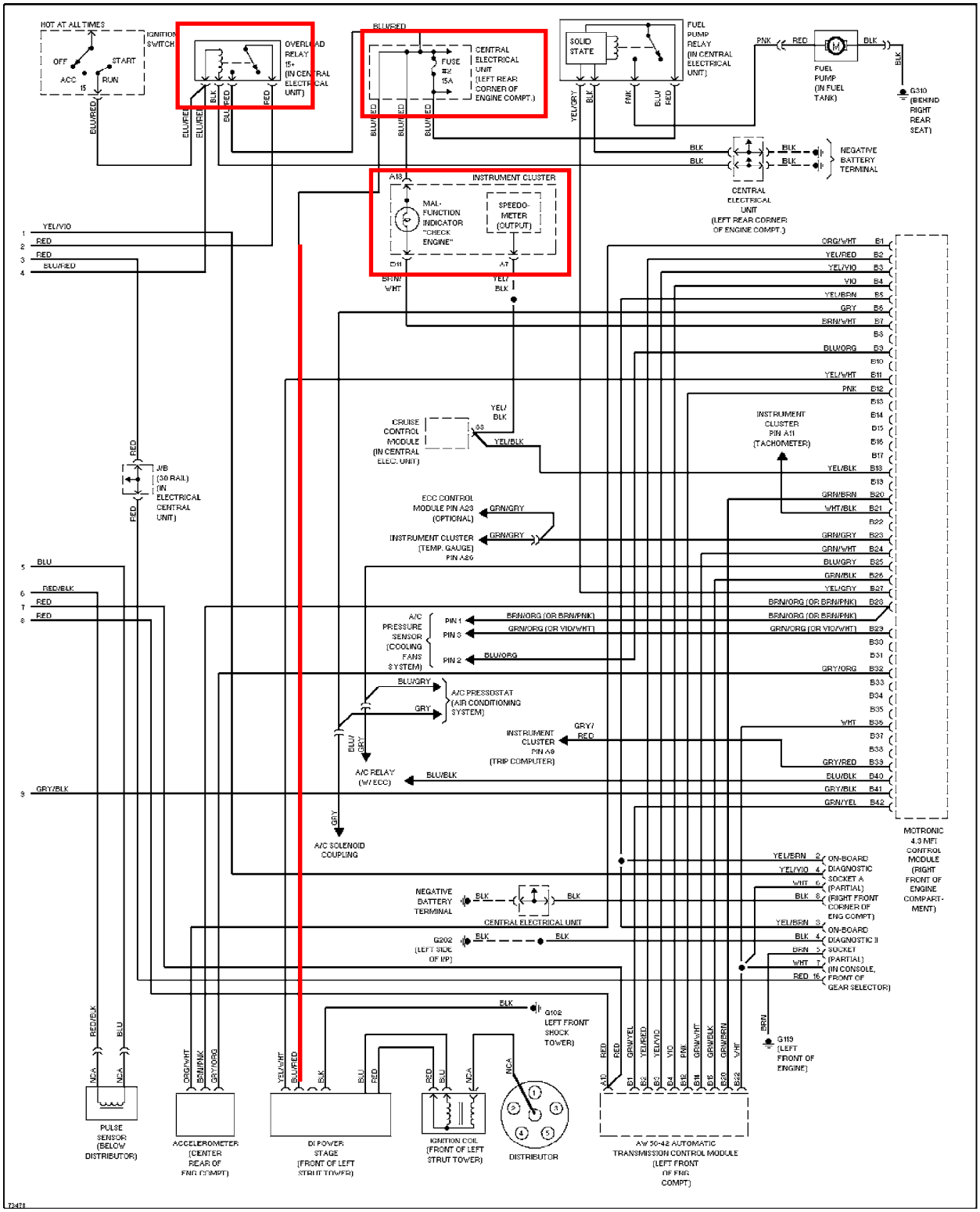

Fig. 2: Wiring Diagram (2 Of 2)